International Journal of Technical Innovation in Modern Engineering & Science (IJTIMES)
Impact Factor: 5.22 (SJIF-2017), e-ISSN: 2455-2585
Volume 5, Issue 03, March-2019

Protection of Transmission Line Using Over-current Relay in MATLAB/Simulink Simulation

Sandeep Makwana[1], Vijay Makwana[2]

[1]*Department of Electrical Engineering, G H Patel College of Engineering and Technology, Vallabh Vidyanagar 388 120, Gujarat, India,*

[2]*Department of Electrical Engineering, G H Patel College of Engineering and Technology, Vallabh Vidyanagar 388 120, Gujarat, India,*

Abstract* — *Protection relays which used in power system must be authentic and judicious in both way financial and size. Over-current relay is one of the most meticulous relay in the power system protection. So designing of over-current relay in any computerize software is much needed and preferable. Also for detailed work training and researching of over-current relay for different situation, simulation is one of the best way. This paper deals with MATLAB/Simulink simulation of Over-current relay for transmission lines. This simulation sub-system of IDMT (inverse definite minimum time) over-current react on different power system faults like single line- ground, double line and double line to ground and gives results of time of operation of relay.

Keywords* — *MATLAB/Simulink, Over-current relay, Power system faults, Power system protection, Simulation.

ACRONYMS

PS - Plug Setting
PSM - Plug Setting Multiplier
TMS - Time Multiplier Setting
TOP - Time of Operation

I. INTRODUCTION

Protection relay isolate the faulty part of the power system from remaining power system for uphold system stability and security. Protection relay is construct based on selectivity, loyalty, quickness and sensitivity, etc. Protection relay must be operate expeditiously and carefully before power system turn into unstable condition. Over-current relay is one of the usual relay used in power system for protecting numerous part of system [1]. Over-current relay is use in protection of motor, transformer, transmission and distribution lines, etc. Over-current relay is use in transmission line with main and back protection scheme means whenever fault take place in system first main relay give protection but any how if that condition failed then backup relay gives protection [2].

When fault current value is exceed the pre-define or pre-set value of current, in this situation relay give signal to circuit breaker for isolating faulty part of system. Up to 66 kV lines in power system, over-current relay can give both main and back-up protection, but into 220 kV lines of power system, over-current relay can give only back-up protection [1]. Types of over-current relay has its own merits and demerits, those are given in [1, 2, and 3]. Time of operation of relay can be affected by fault resistance present in the system. The current flow has been take one path for ground faults which consists of the arc, tower impedance, and tower footing resistance [3].

Over-current relay can be directional or non-directional according to where it is put in lines for protection. Transmission line faults can be allocated into two parts one is symmetrical faults and other one is un-symmetrical. Un-symmetrical faults are less fierce, than symmetrical faults [2].

Simulation is a way for designing software modelling or representation which can behave like actual component or a system. There are many papers which describe some simulation models of such systems. Like over-current relay can be design in MATLAB/Simulink using S-R logic [7]. MATLAB/Simulink has been used to design logic of over-current relay for real time simulation with hardware in the loop validation [10]. Also Simulink software was used to make one model of over-current relay for 132 kV transmission line [5].

This paper deals with the modelling of over-current relay in MATLAB/Simulink software. For 220 kV transmission line, MATLAB/Simulink model is describe in this paper. This over-current relay model's testing is trying to done on single line to ground, double line faults and double line to ground faults with different fault resistance. If this approach successfully done in MATLAB/Simulation then that logic can be apply for hardware modelling.

II. THEORY OF OVER-CURRENT RELAY

Over-current relay protects electrical power systems in opposition to superfluous currents due to short circuits, ground faults, over-load, etc. Over-current relay is single operating quantity relay because it operates only on current magnitute and over-current relay works depends on only current.Over-current relay classified into four types based on relay's operating time [2]:

1) Instantons Over-current relay
2) Time delayed over-current relay
3) Inverse time over-current relay
4) Inverse definite minimum time over-current relay

The general equation that gives the inverse characteristic is given below [1]:

$$Time\ of\ operation\ of\ relay = \frac{\alpha}{PSM^{\beta} - 1} * TMS$$

Where,

α and β are constant.
PSM = Plug Setting Multiplier = Fault current / Plug setting
TMS = Time Setting Multiplier

TABLE 1: Different values of α and β for different curves [1]

Slope of time-current curve	α	β
Normal Inverse	0.14	0.02
Very Inverse	13.5	1.00
Extremely Inverse	80.0	2.00
Long Time Inverse	120.0	1.00

III.MATLAB/Simulink SIMULATION

As displayed in the fig. 1 simulation model has been designed using three phase source (220KV, 50Hz), three phase V-I measurement, three phase breaker, distributed line parameter, three phase fault, three phase RLC series load (76.2 MW, 57.2 MVAR). Distributed parameters values can be change, when there will choose another conductor because it's depends on conductor also.

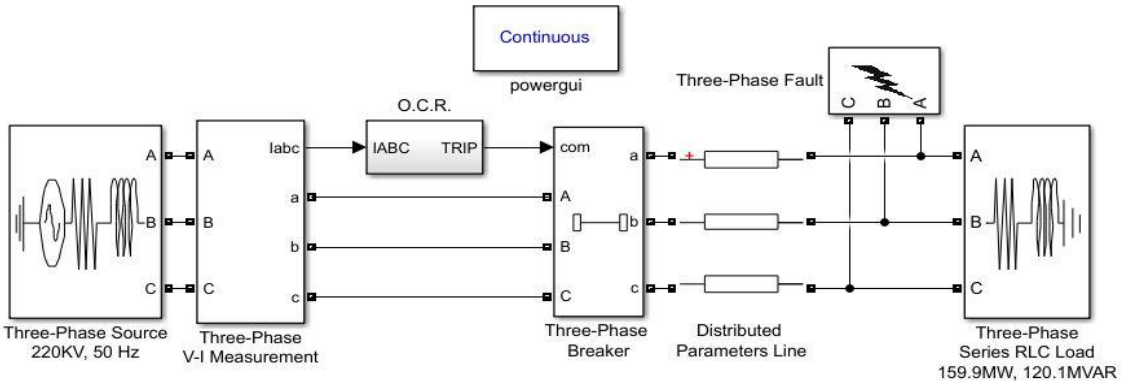

Fig. 1: MATLAB simulation representation of transmission line

There are some parameter must be needed for simulating this transmission line simulation model and those parameters are given below:

Parameters	Values
Phase to phase voltage (Vrms)	220 kV
Frequency	50 Hz
Positive sequence resistance (R1)	0.0748746 Ω/km
Negative sequence resistance (R0)	0.2199746 Ω/km
Positive sequence inductance (L1)	0.00127085 H/km
Negative sequence inductance (L0)	0.00426289 H/km
Positive sequence capacitance (C1)	$2.33471 * 10^{-9}\ F/km$
Negative sequence capacitance (C0)	$1.46429 * 10^{-9}\ F/km$
Line length	100 km
Active power	76.2 MW
Reactive power	57.2 MVAR

TABLE 2: Different parameters consider in simulation

Fig. 2 indicate that there are three over-current relay sub-systems for phase faults, fig. 3 indicate that there is one sub-system for the earth fault and fig. 4 display one trip circuit and those are in over-current relay sub-system (O.C.R.). Three phase and one earth relay combination increase dependability and accuracy of protection scheme if there is a power transformer in system. All relay trip signals has been apply to OR logic gate of trip circuit which gives one common trip command.

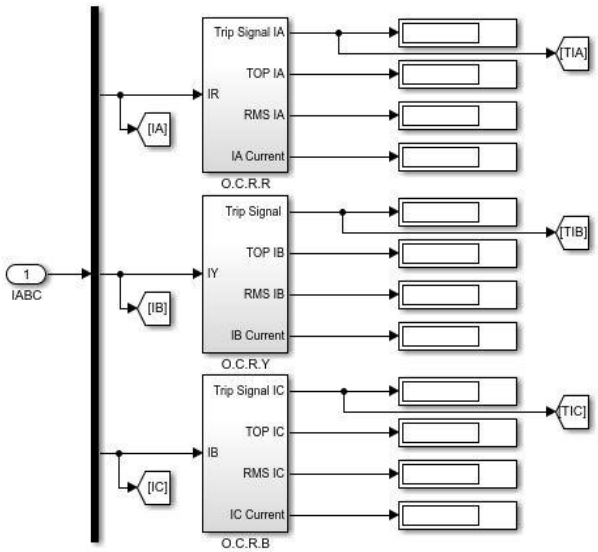

Fig. 2: Phase relay sub-system

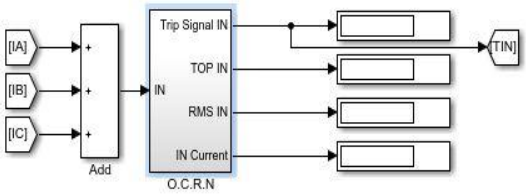

Fig. 3: Earth relay sub-system

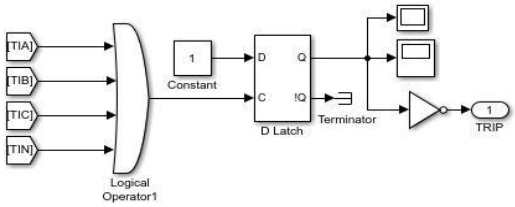

Fig. 4: Trip circuit

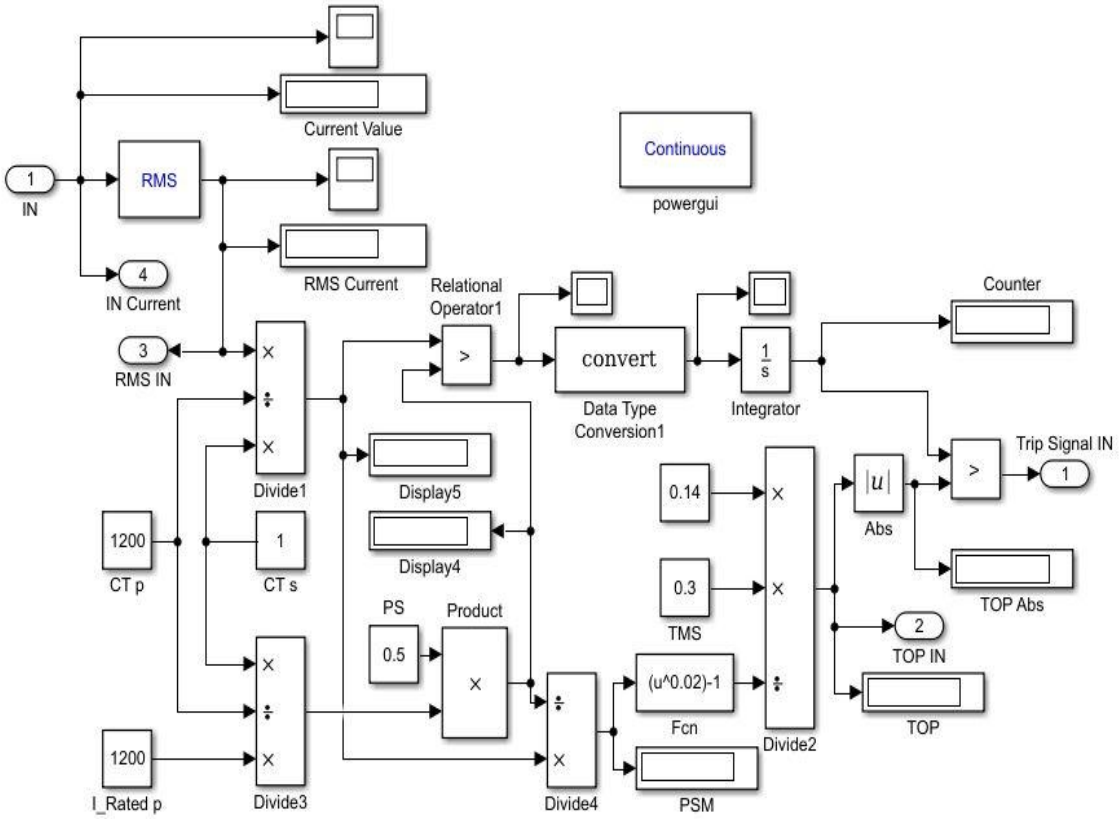

Fig. 5: Over-current relay logic sub-system [5]

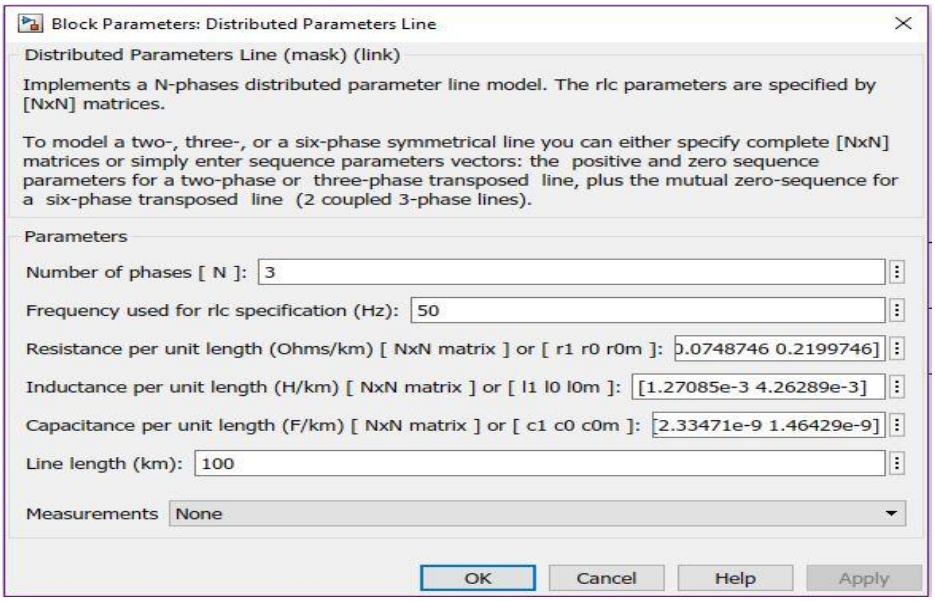

Fig. 6: Distributed line parameter module

As shown in fig. 5 so many modules has been administer to design a logic of over current relay. Upper design of fig. 5 represents counter logic and lower design of fig represents time of operation of relay. Current transformer ratio had been decided based on full load current. Changing values of some modules which is shown in fig. 5 will gives different characteristics of over-current relay which can see in table 1. When value of display 5 higher than value of display 4 it will start counter circuit. Now when counter value and time of operation value both are equals relay sub-system has been gives trip signal.

IV. MATLAB/Simulink SIMULATION RESULTS

This portion of paper explain results of simulation. In this designed MATLAB system all faults are initiate at 1.0 sec before that it works as stable system. Main target of simulation model is to get proper time of operation of relay and trip signal which apply to circuit breaker. Changing fault resistance in three phase fault module can be give effect in time of operation of relay. (0.5 * 1200 = 600 A) current consider as pick-up current for earth relay and (1.25 * 1200 = 1500 A) current consider as pick-up current for all phase relays. Comparatively earth relay has low plug settings which is in phase relays, because there are three parameters affect to earth fault current which are fault resistance, zero sequence impedance, earth impedance.

TABLE 3: Variation in Time Multiplier Setting (L-G Fault)

TMS	Rf (ohm)	If phase(A)	TOP (sec) 1.25 PS		If earth(A)	TOP (sec) 0.5 PS	
			Cal.	Pract.		Cal.	Pract.
0.1	2	1755	4.451	4.457	1445	0.790	0.810
0.2	2	1755	8.902	8.918	1445	1.578	1.600
0.3	2	1755	13.355	13.482	1445	2.368	2.380
0.4	2	1755	17.805	17.820	1445	3.157	3.170
0.5	2	1755	22.257	22.281	1445	3.947	3.960

Table 3 gives results of TOP when there is variation in TMS. Here fault resistance consider as 2 Ohm constant.

TABLE 4: Variation in Fault resistance (L-G Fault)

SR NO	Rf (ohm)	If earth (A)	TOP (sec) (TMS=0.2, PS=0.5)	
			Cal.	Pract.
1	2	1445	1.578	1.600
2	5	1427	1.601	1.620
3	10	1387	1.657	1.669
4	15	1344	1.722	1.738
5	20	1301	1.795	1.807
6	30	1212	1.977	1.993
7	40	1122	2.223	2.231
8	50	1039	2.536	2.549

Table 4 gives results of TOP when there is variation in fault resistance. Here TMS consider as 0.2 constant.

TABLE 5: Different faults results

Fault	Rf (ohm)	If phase(A)	TOP (sec) (1.25 PS, 0.2 TMS)		If earth(A)	TOP (sec) (0.5 PS, 0.2 TMS)	
			Cal.	Pract.		Cal.	Pract.
LG	2	A=1755	4.451	4.457	1445	0.790	0.810
LG	50	A=1356	-	-	1039	2.536	2.549
LL	2	A=2446	2.849	2.854	≈0	-	-
		B=2303	3.251	3.256			
LL	50	A=1528	75.69	76.57	≈0	-	-
		B=1517	124.22	126.10			
LLG	2	A=2494	2.739	2.742	1063	2.434	2.445
		B=2432	2.884	2.890			
LLG	50	A=1489	-	-	839	4.161	4.162
		B=1730	9.799	9.805			

Table 5 gives result of TOP when single line to ground, double line, and double line to ground faults occurs also there is variation in fault resistance present. In this table meaning of some of TOP are not present because those fault currents doesn't reach up to pick-up current of that relay. In a case of line to ground fault with 50 ohm fault resistance phase fault current is 1356 A and earth fault current is 1039 A while plug setting of phase relay has been set at 1500 A and earth relay plug setting set at 600 A. So, phase relay sub-system didn't operate but earth relay will be operate. Same consideration has been for phase A while double line-ground fault being.

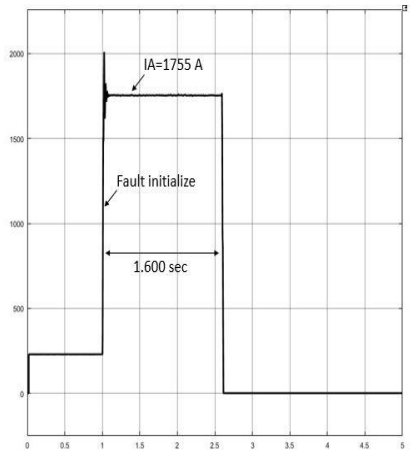

Fig. 7: Phase fault current

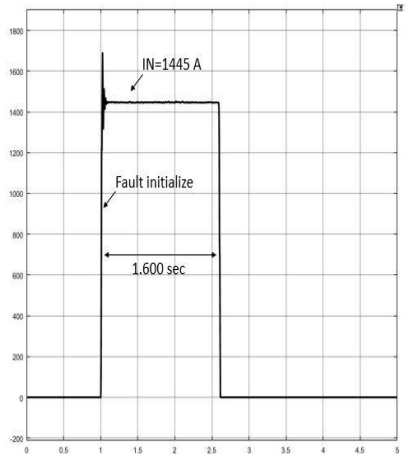

Fig. 8: Earth fault current

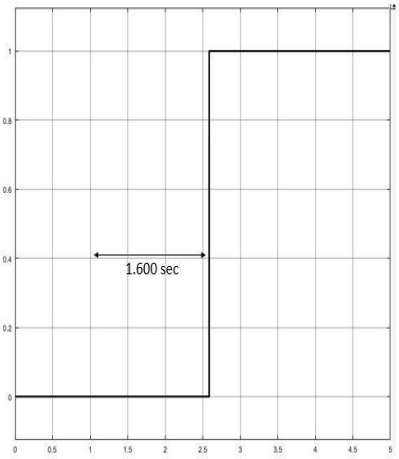

Fig. 9: Trip signal

Fig. 7 is shows what is the value of phase current before and after the fault occur. It can be seen that the magnitude of phase fault current is 1755 A after fault. And fig. 8 shows that earth fault current magnitude is 1445 after fault occur. Fault initialize is after 1 sec when simulation has run and TOP of earth fault is 1.6 sec which is less-than the time of operation of phase relays so trip signal has be generated at time (1 + 1.6 = 2.6 sec). In this case fault resistance is consider as 2 Ohm.

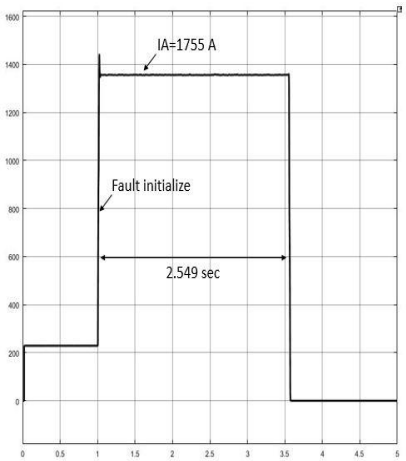

Fig. 10: Phase fault current

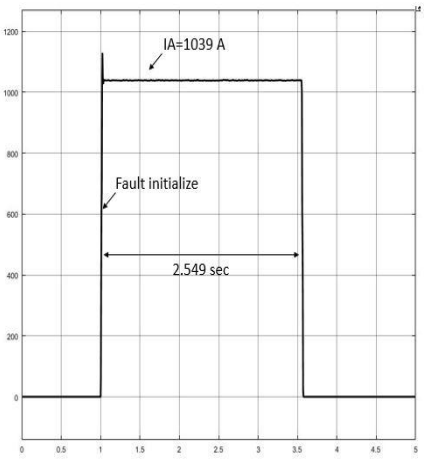

Fig. 11: Earth fault current

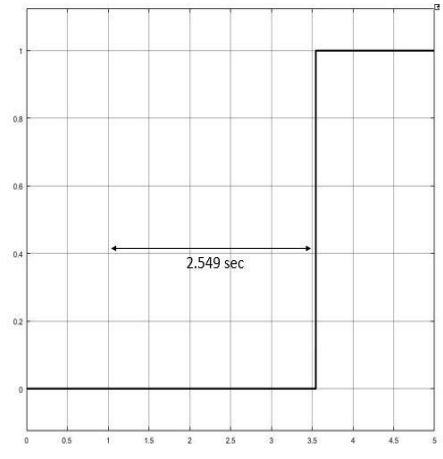

Fig. 12: Trip signal

Fig. 10 displays phase fault current which is seen as 1755 A and fig. 12 displays earth fault current which can see as 1039 A when fault resistance has been consider as 50 Ohm. Earth relay and phase relay both has sense the fault current and

start interpretation in simulation model. Fig. 12 represent simulated trip signal of time of operation of earth relay is 2.549 sec so trip signal shall be occur at (1 + 2.549 = 3.549 sec).

V. CONCLUSION

MATLAB/Simulink software model designed successfully in this research work. Using Simulink software designing over-current relay helps researcher to study various characteristics of over-current relay. This logic which is representing over-current relay can be apply on hardware model, while anyone will made with different microcontroller. Results of MATLAB/Simulink simulation system is very accurate and convincing and MATLAB/Simulink model has ± 0.55 % error. All symmetrical and un-symmetrical faults can be apply to this model and gives results of appropriate faulty conditions. Considering different constants from table 1 and using this simulation model different characteristic can be achieve.

REFERENCES

[1] Bhuvanesh A. Oza, Nirmalkumar C. Nair, Rashesh P. Mehta and Vijay H. Makwana. "Power System Protection and Switchgear", Tata McGraw-Hill Education, New Delhi.
[2] Bhavesh Bhalja, R. P. Maheshwari, and Nilesh G. Chothani. "Protection and Switchgear" Oxford University Press, New Delhi, 2011.
[3] Blackburn, J. Lewis, and Thomas J. Domin. *Protective relaying: principles and applications*. CRC press, 2006.
[4] G. Benmouyal, and M. Meisinger. "IEEE Standard Inverse-Time Characteristic Equations for Overcurrent Relays", IEEE Transaction on Power Delivery, Vol. 14, No. 3, July 1999.
[5] H. Hussin, M. H. Idris, M. Amirruddin, M. S. Ahmad, M. A. Ismail, F. S. Abdullah, and N. M. Mukhatar. "Modeling and Simulation of Inverse Time Overcurrent Relay Using Matlab/Simulink", IEEE I2CACIS, 22 October 2016.
[6] Campos, David, Edgar Moreno, and Domingo Torres. "Test and evaluation time-inverse over-current protection algorithm using SIMULINK." In *Proceedings of the 7th WSEAS International Conference on Signal Processing*, pp. 69-74. World Scientific and Engineering Academy and Society (WSEAS), 2008.
[7] P. Maji, and G.Ghosh. "Designing Over-Current Relay Logic in Matlab", IJSER, Vol. 8, Issue 3, March 2017.
[8] Idris, Muhd Hafizi, Surya Hardi, and Mohd Zamri Hasan. "Teaching distance relay using Matlab/Simulink graphical user interface." *Procedia Engineering* 53 (2013): 264-270.
[9] Anil V. and Jayant. "Development of distance relay in mat lab." In *Proceeding of 33th IRF International Conference*, 26th July 2015.
[10] Almas, Muhammad Shoaib, Rujiroj Leelaruji, and Luigi Vanfretti. "Over-current relay model implementation for real time simulation & Hardware-in-the-Loop (HIL) validation." In *IECON 2012-38th Annual Conference on IEEE Industrial Electronics Society*, pp. 4789-4796. IEEE, 2012.